REVISIONS					
REV	ECN#	DESCRIPTION	REV.BY	APPR.BY	DATE
A	- -	Initial release	W.FS	M.D	2024/2/26

CUSTOMER DRAWING

Ordering information

BMP 082X – 61 – 4 – Y01

- Key: X Orange, Y Black, U Yellow, V Green
- HVIL: 0 No HVIL, 1 HVIL
- Cable Size: 2.5=2.5mm², 4=4mm², 6=6mm², 10=10mm²
- Salt spray: Default: 96 hour, Y01: 336 hour, Y02: 480 hour

Specification:

1. Operation Temp: −40℃ ~+125℃.
2. Opearting Current: 60A (Max) .
3. Operating Voltage: 1500 VDC, 500 VDC (HVIL)
4. <S/C>▲ Withstanding Voltage: 6000VDC & 4000VAC, 500 VAC (HVIL)
5. ▲ Insulation Resistance: 2GΩ, 550MΩ (HVIL)
6. Contact Resistance: <2mΩ.
7. <S/C>▲ Protection Level: IP68 & IP6K9K, IPXXB & IPXXD
8. Durability: 100 Min.
9. EMC.
10. with Auto-secondary lock system.
11. with HVIL.
12. Fire protection grade: UL94 V-0.
13. Mating Plug: "BMP162-60/61", "BMP182-60/61", "BMP482-60/61"

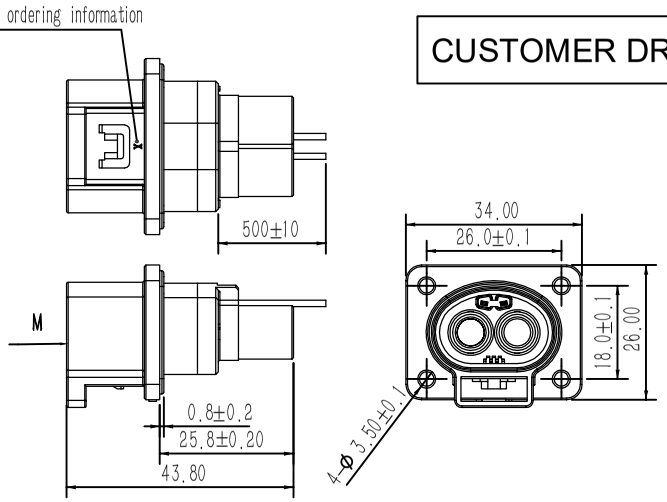

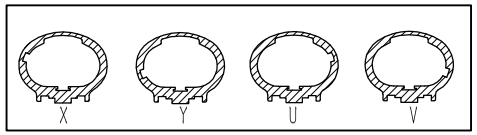

Sketch map for key in M direction

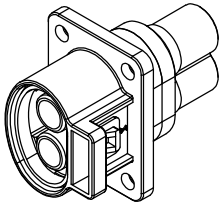

Notes: Same terminal for 2.5 and 4 mm² product

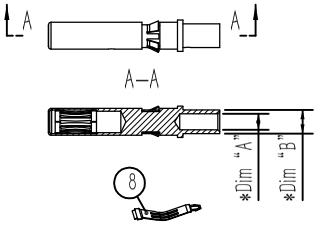

P/N–cable size	Dim A	Dim B
PF0401–4	3.05±0.1	4.60±0.05
PF0401–6	3.76±0.1	6.00±0.05
PF0401–10	4.50±0.1	6.00±0.05

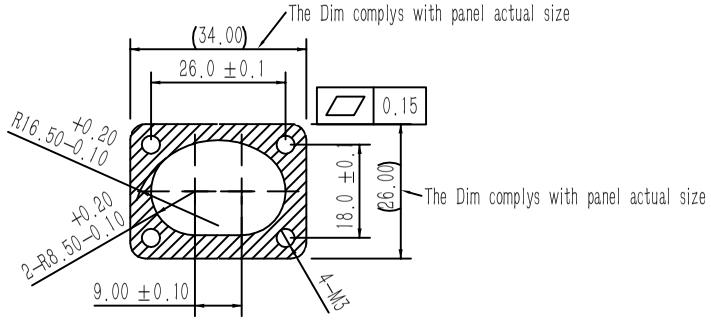

Installation Size for Panel (Mounting Surface roughness Ra1.6)

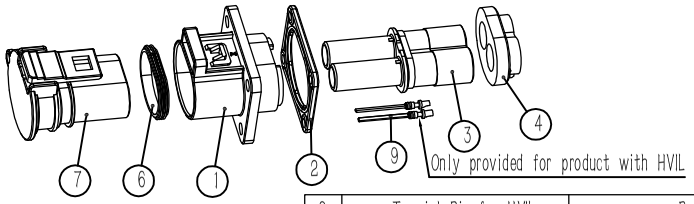

Notes: Unshielded cable of corresponding size are recommended for cable selection.

Product with HVIL		Product without HVIL	
P/N	Product Description	P/N	Product Description
BMP082X–61–2.5	BMP60A 2pos Rcpct, Key X, 2.5mm^2,with HVIL	BMP082X–60–2.5	BMP60A 2pos Rcpct, Key X, 2.5mm^2,w/o HVIL
BMP082Y–61–2.5	BMP60A 2pos Rcpct, Key Y, 2.5mm^2,with HVIL	BMP082Y–60–2.5	BMP60A 2pos Rcpct, Key Y, 2.5mm^2,w/o HVIL
BMP082U–61–2.5	BMP60A 2pos Rcpct, Key U, 2.5mm^2,with HVIL	BMP082U–60–2.5	BMP60A 2pos Rcpct, Key U, 2.5mm^2,w/o HVIL
BMP082V–61–2.5	BMP60A 2pos Rcpct, Key V, 2.5mm^2,with HVIL	BMP082V–60–2.5	BMP60A 2pos Rcpct, Key V, 2.5mm^2,w/o HVIL
BMP082X–61–4	BMP60A 2pos Rcpct, Key X, 4mm^2,with HVIL	BMP082X–60–4	BMP60A 2pos Rcpct, Key X, 4mm^2,w/o HVIL
BMP082Y–61–4	BMP60A 2pos Rcpct, Key Y, 4mm^2,with HVIL	BMP082Y–60–4	BMP60A 2pos Rcpct, Key Y, 4mm^2,w/o HVIL
BMP082U–61–4	BMP60A 2pos Rcpct, Key U, 4mm^2,with HVIL	BMP082U–60–4	BMP60A 2pos Rcpct, Key U, 4mm^2,w/o HVIL
BMP082V–61–4	BMP60A 2pos Rcpct, Key V, 4mm^2,with HVIL	BMP082V–60–4	BMP60A 2pos Rcpct, Key V, 4mm^2,w/o HVIL
BMP082X–61–6	BMP60A 2pos Rcpct, Key X, 6mm^2,with HVIL	BMP082X–60–6	BMP60A 2pos Rcpct, Key X, 6mm^2,w/o HVIL
BMP082Y–61–6	BMP60A 2pos Rcpct, Key Y, 6mm^2,with HVIL	BMP082Y–60–6	BMP60A 2pos Rcpct, Key Y, 6mm^2,w/o HVIL
BMP082U–61–6	BMP60A 2pos Rcpct, Key U, 6mm^2,with HVIL	BMP082U–60–6	BMP60A 2pos Rcpct, Key U, 6mm^2,w/o HVIL
BMP082V–61–6	BMP60A 2pos Rcpct, Key V, 6mm^2,with HVIL	BMP082V–60–6	BMP60A 2pos Rcpct, Key V, 6mm^2,w/o HVIL
BMP082X–61–10	BMP60A 2pos Rcpct, Key X, 10mm^2,with HVIL	BMP082X–60–10	BMP60A 2pos Rcpct, Key X, 10mm^2,w/o HVIL
BMP082Y–61–10	BMP60A 2pos Rcpct, Key Y, 10mm^2,with HVIL	BMP082Y–60–10	BMP60A 2pos Rcpct, Key Y, 10mm^2,w/o HVIL
BMP082U–61–10	BMP60A 2pos Rcpct, Key U, 10mm^2,with HVIL	BMP082U–60–10	BMP60A 2pos Rcpct, Key U, 10mm^2,w/o HVIL
BMP082V–61–10	BMP60A 2pos Rcpct, Key V, 10mm^2,with HVIL	BMP082V–60–10	BMP60A 2pos Rcpct, Key V, 10mm^2,w/o HVIL

No.	Part name	Material	QTY
9	Termial Pin for HVIL	Brass	2
8	Rcpt elastic contact	Phosphor bronze	1
7	Rcpt dust cap	PP	1
6	sealing rubber for Rcpt dust cap	Flame Retardant Silicone Rubber,red	1
5	Female terminal	Red Copper	2
4	Over–molding	PBT	/
3	Rcpt plastic core	PBT(Key:X_Orange; Key:Y_Black; Key: U_Yellow; Key:V_Green;)	1
2	Rcpt sealing gasket	Flame Retardant Silicone Rubber,red	1
1	Rcpt Shell	5# Zinc Alloy	1

BALE		Chengdu City Bale New Energy Technology Co. Ltd			
		WEIGHT	MATERIAL: /		PART NAME: BMP60 2POS RCPT
SIGNATURE		DATE	SHEET	No tolerance(mm): x.: ±1.0 x..: ±0.5 x...: ±0.2 Angle: ±2°	CUST P/N: SEE TABLE
DRAWN	W.FS	2024/2/26	1/1		
CHECKED	M.D	2024/2/26	ANGLE OF VIEW		DWG NO: BMP082-61
APPROVAL	M.D	2024/2/26			

THE COPYRIGHT BELONGS TO BALE